AIR INLET SCREEN - EASILY REMOVABLE

Side View

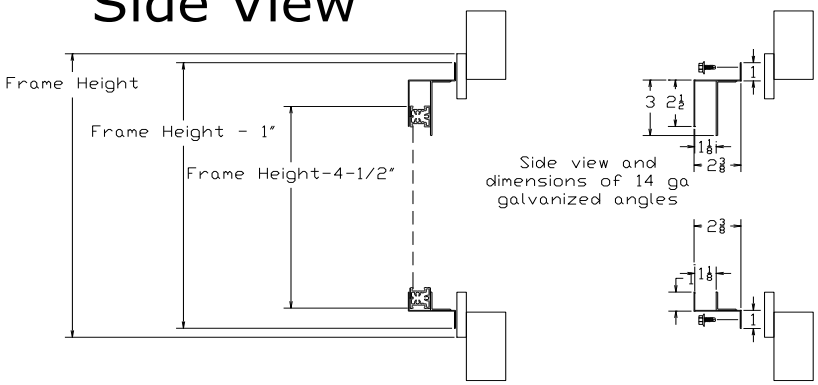

Front View

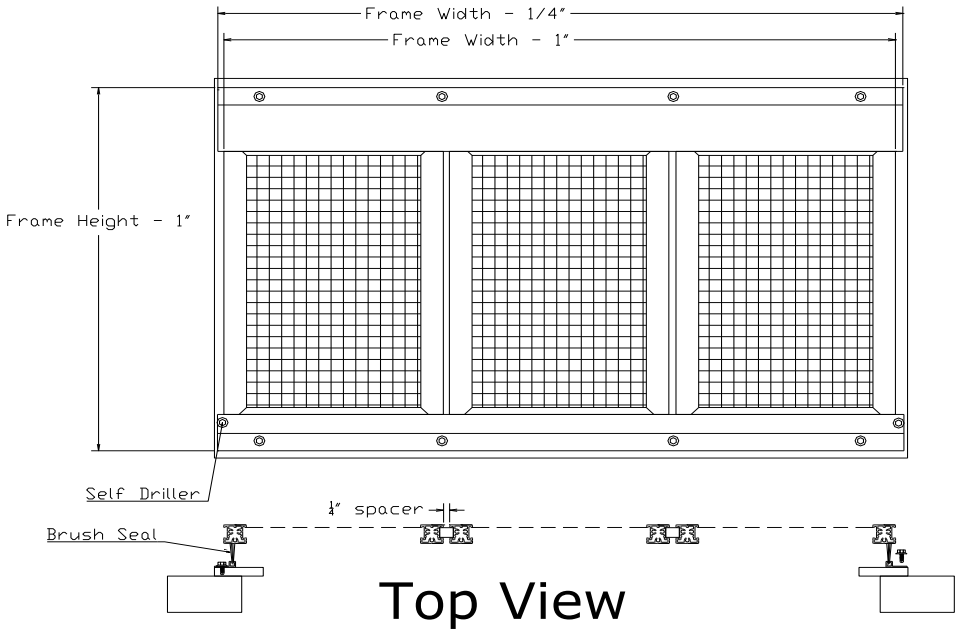

Top View

1.) Attach top and bottom "Z" brackets as shown to frame.
(Make sure bottom can support weight)
2.) Cut brush down to fit and attach to frame with small self drillers.
3.) Lift up screen section into top "Z" bracket and let drop into bottom "Z" bracket.
4.) Slide section to end and repeat with other sections.
5.) Put self drillers at end of bottom "Z" bracket to keep sections tight.
6.) Caulk where needed.

AutoCad\Install\Easy Remove